Parts Catalog



SP05

Mixer

Model: SP05

2/25/2025 Rev. B
IMPORTANT!
TO EXPEDITE SHIPMENT OF PARTS, ALWAYS SPECIFY MODEL, REV,
PART NUMBER, AND SERIAL NUMBER OF UNIT.

GLOBE FOOD EQUIPMENT COMPANY

2215 East River Road
Dayton, Ohio 45439

Parts Department
Toll Free 1-800-745-6238
E-Mail: info@globefoodequip.com
Website: www.globefoodequip.com

Not for resale

© Globe Food Equipment Company, 2025

Table of Contents

Description	Page
SP05 Mixer Base Components	4
SP05 Bowl Lift Components	6
SP05 Transmission Components	8
SP05 Motor Components	10
SP05 Wiring Diagram	12

SP05 Mixer Base Components

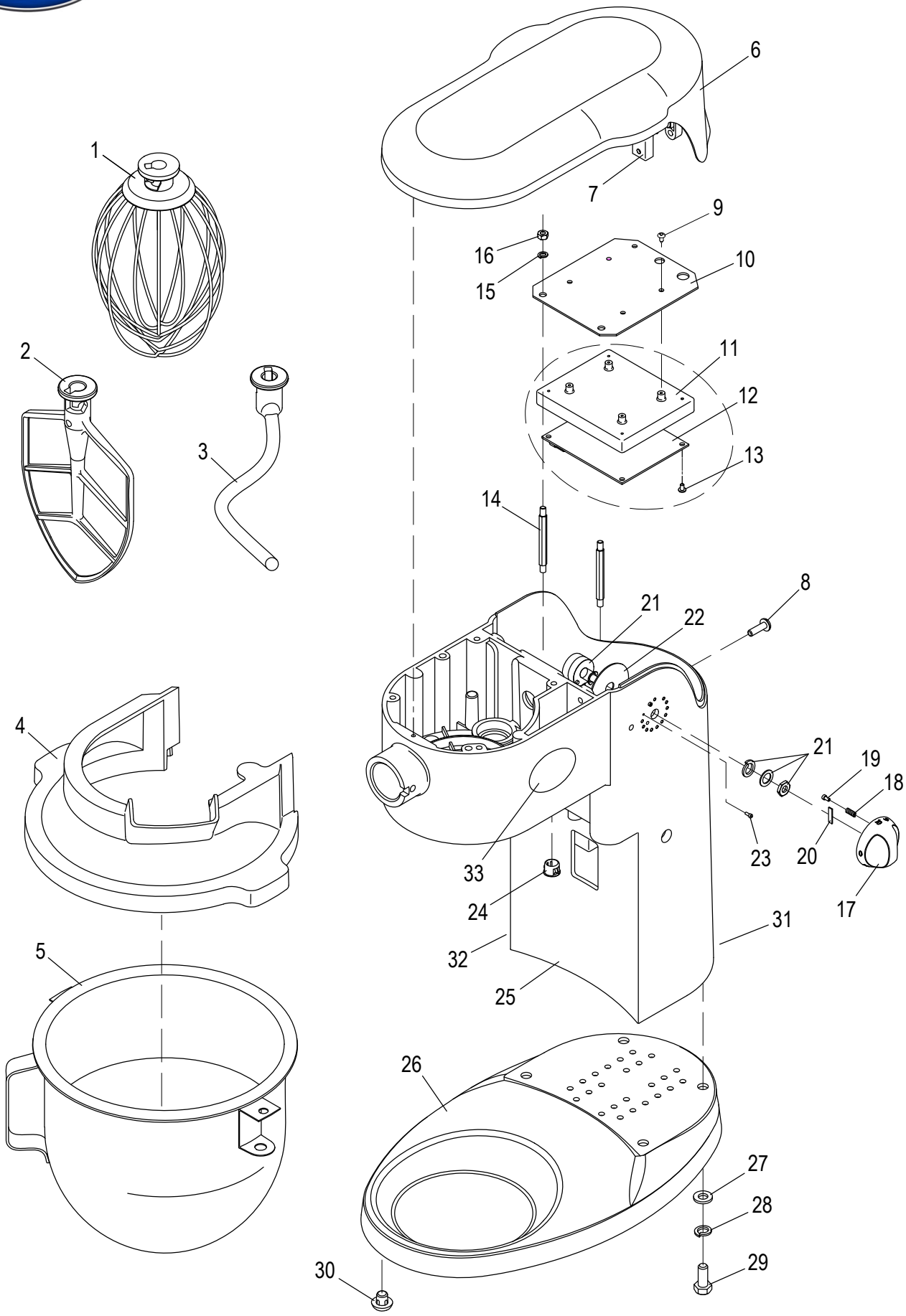

© Globe Food Equipment Company

SP05 Mixer Base Components

Item	Part Number	Description	Qty	Serial Number
1	XXWhip-05	Whip	1	
2	XXBeat-05	Beater	1	
3	XXHook-05	Spiral Hook	1	
4	X5E01-1	Safety Guard	1	
5	XXBowl-05	Mixer Bowl	1	
6	X5A13-1	Top Cover	1	
7	X5A39	Cover Reinforcement	1	
8	H00523	M5x18 Truss Hd Screw	1	
9	X00524	Screw	4	
10	X5A21	Mounting Plate	1	
11	X5A33	Plate	1	
12	X5A20-1	Control Board	1	
13	X00525	Screw	4	
14	X5A41	Standoff	2	
15	H00320	Washer M5 Split Lock	2	
16	X30186	Hex Nut M5-0.8 OD-8, TH-4mm, Zinc	2	
17	X5A05-1	Speed Knob	1	
18	X5A08-1	Spring	1	
19	X5A09	Plunger	1	
20	X5A44	Alignment Tab	1	
21	X5A15	Potentiometer	1	
22	X5A16	Insulation Pad	1	
23	H00526	Screw M2x5 Socket Hd Cap	2	
24	X5A26	Hole Plug	1	
25		Mixer Body	1	
26	X5A27	Base	1	
27	X08101	Washer M8x16mm Flat	4	
28	H00527	Split Lock Washer	4	
29	H00117	Hex Head Screw M8x20 - Zn	4	
30	X5UH-1260	Foot Kit (4/Set)	4	
31	X91018	Hazardous Voltage Label	1	
32	X91019	Warning Label	1	
33	871-2	Globe Logo Decal 3.5"	1	

© Globe Food Equipment Company

SP05 Bowl Lift Components

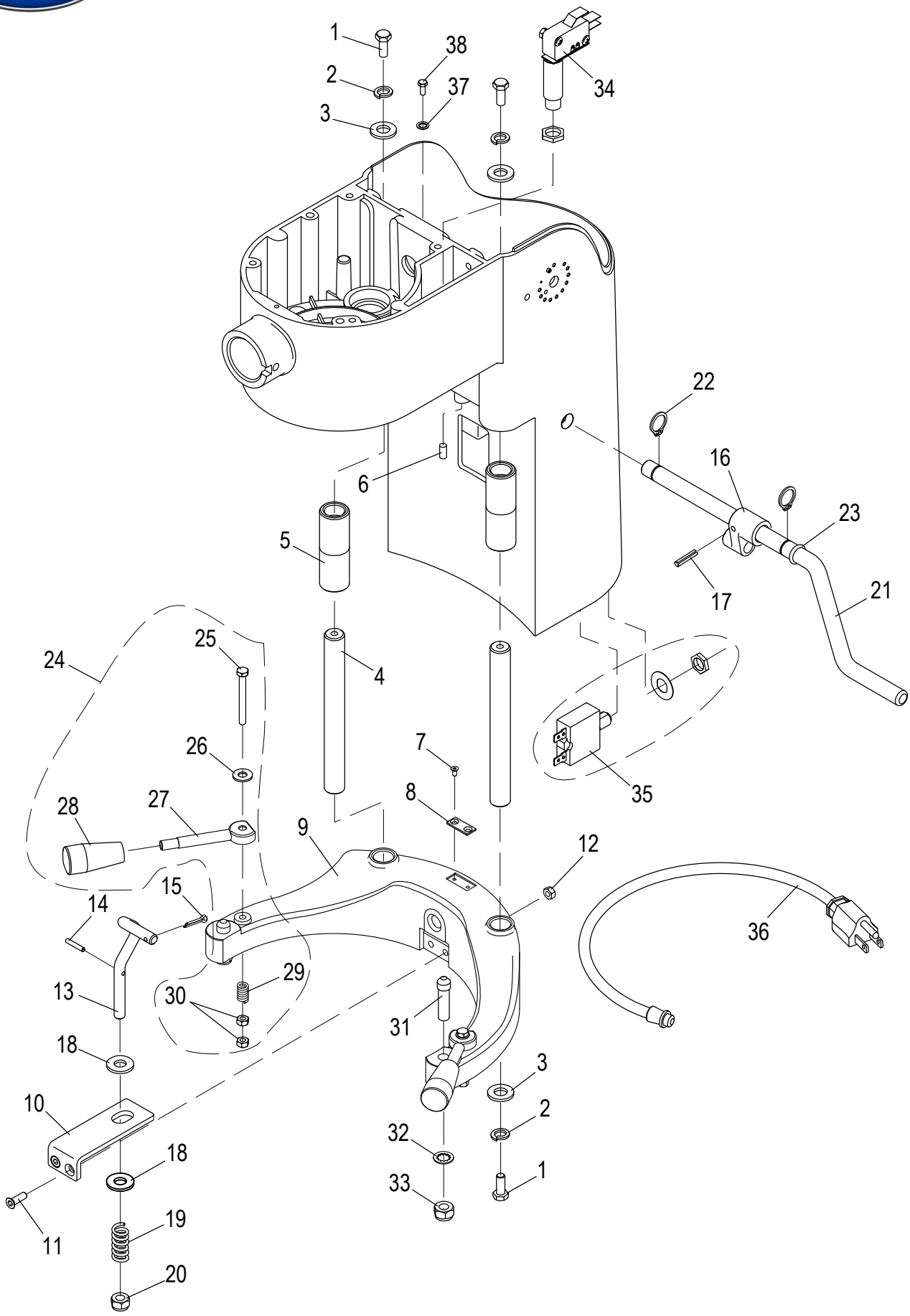

© Globe Food Equipment Company

SP05 Bowl Lift Components

Item	Part Number	Description	Qty	Serial Number
1	H00197	Hex Hd Screw M6x15 - Zn	4	
2	X08008	Washer	4	
3	M035	Flat Washer ID 6.5 OD 12 TH 1.5 mm Zinc	4	
4	X5B03	Bowl Lift Shaft	2	
5	X5B04	Bushing	2	
6	H00183	Set Screw M5x10 Cup Pt. Hex Socket - BO	1	
7	H00528	M3x5 Flat Hd Screw	2	
8	X5B07	Pad	1	
9	X5B08	Bowl Cradle	1	
10	X5B09	Bracket	1	
11	M048	Flat Hd Screw M5x0.8x16 mm, Zinc 8.8 Slotted	2	
12	X30186	Hex Nut M5-0.8 OD-8, TH-4mm, Zinc	2	
13	X5B12	Connection Rod	1	
14	H00529	Pin	1	
15	H00530	Cotter Pin	1	
16	X5B14	Connector	1	
17	H00531	Pin	1	
18	X08101	Washer M8x16mm Flat	2	
19	X08091	Spring	2	
20	X08074	Nut M8 Hex	1	
21	X5B20	Bowl Lift Handle	1	
22	X5B19	Retaining Ring	2	
23	X5B22	O-Ring	1	
24	X08089-93	Bowl Clamp Kit (2/Set)	1	
25	X08085	Screw M5x45mm Hex Hd	2	
26	X10034	Washer	2	
27		Bowl Clamp Arm	2	
28	X08090	Knob	2	
29		Bowl Clamp Spring	2	
30	H00341	Nut	4	
31	X5B34	Pin	2	
32	H00536	M8 Internal Tooth Lock Washer	2	
33	X08074	Nut M8 Hex	2	
34	X5E02	Microswitch Kit	1	
35	X00538	Reset Switch	1	
36	X5B23	Power Cord	1	
37	H00540	Lock Washer	1	
38	X00539	Ground M5x10 Hex Hd Screw (Green)	1	

© Globe Food Equipment Company

SP05 Transmission Components

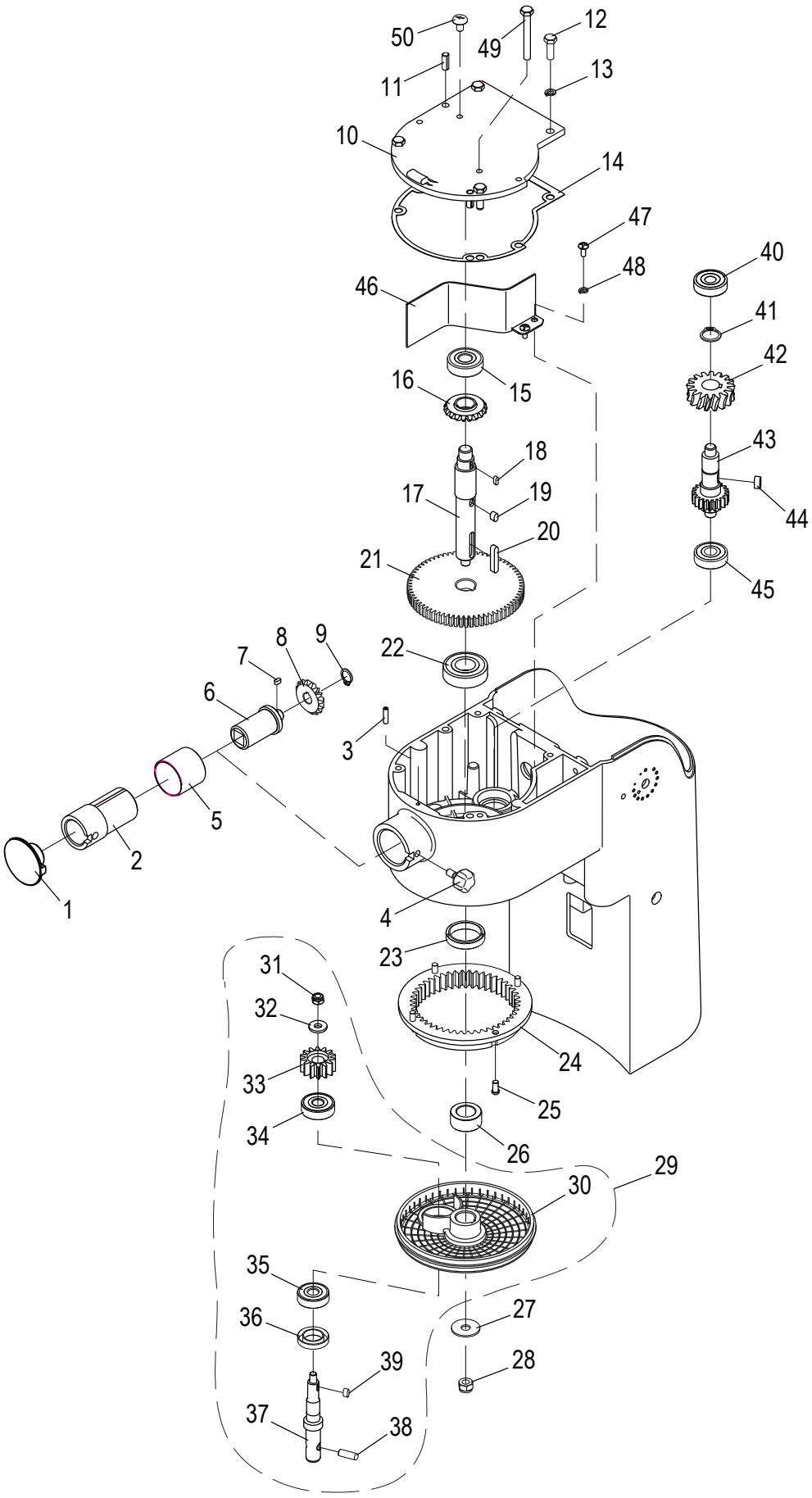

© Globe Food Equipment Company

SP05 Transmission Components

Item	Part Number	Description	Qty	Serial Number
1	X5C01	Attachment Plug	1	
2	X5C02	Hub Attachment	1	
3	H00541	M4x16 Cup Point Set Screw	1	
4	X5C21	Thumb Screw	1	
5	X5C47	Anti-Oil Bushing	1	
6	X5C03	Hub	1	
7	H00542	Key	1	
8	X5C05	Level Drive Gear (16T)	1	
9	X5C06	Retaining Ring	1	
10	X5C09	Gear Cover	1	
11	X5C19	Locating Pin	2	
12	H00116	Hex Head Screw M6-1.0x20 - Zn	4	
13	X08008	Washer	4	
14	X5C10	Gasket	1	
15	X10117	Bearing (6201)	1	
16	X5C12	Level Drive Gear (19T)	1	
17	X5C13	Drive Shaft	1	
18	H00543	Key	1	
19	H00544	Key	1	
20	H00545	Key	1	
21	X5C17-1	Drive Gear (66T)	1	
22	X08114	Bearing (6203LU)	1	
23	X5C22	Oil-Seal	1	
24	X5C23	Internal Planetary Gear (47T)	1	
25	H00546	M5x10mm Button Hd Screw	4	
26	X08116-1	Bushing & Seal Kit	1	
27	X00547	Flat Washer	1	
28	X08074	Nut M8 Hex	1	
29	X01874	Planetary Assembly	1	
30	X5C32	Planetary Holder	1	
31	X08015	Nut M6 Hex - Nylon Insert	1	
32	H00120	Flat Washer M6x18mm	1	
33	X5C30	Pinion Gear (14T)	1	
34	X5C31	Bearing (6200LU)	1	
35	X08018	Bearing (6001LU)	1	
36	X5C36	Oil-seal	1	
37	X5C37	Planetary Shaft	1	
38	X08037	Dowel Pin	1	
39	X08036	Key 4x8x8mm	1	
40	X5C39	Bearing (6200)	1	
41	X5C40	Retaining Ring	1	
42	X5C41	Drive Gear (16T)	1	
43	X5C42-1	Transmission Shaft (22T)	1	
44	X08130	Key 5x5x12mm	1	
45	X5C31	Bearing (6200LU)	1	
46	X5C45	Divider Plate	1	
47	H00551	Lock Washer	2	
48	H00552	Screw	2	
49	H00553	Screw M6x55mm Hex Hd	1	
50	H00554	Screw M6x10mm Pan Hd	1	

© Globe Food Equipment Company

SP05 Motor Components

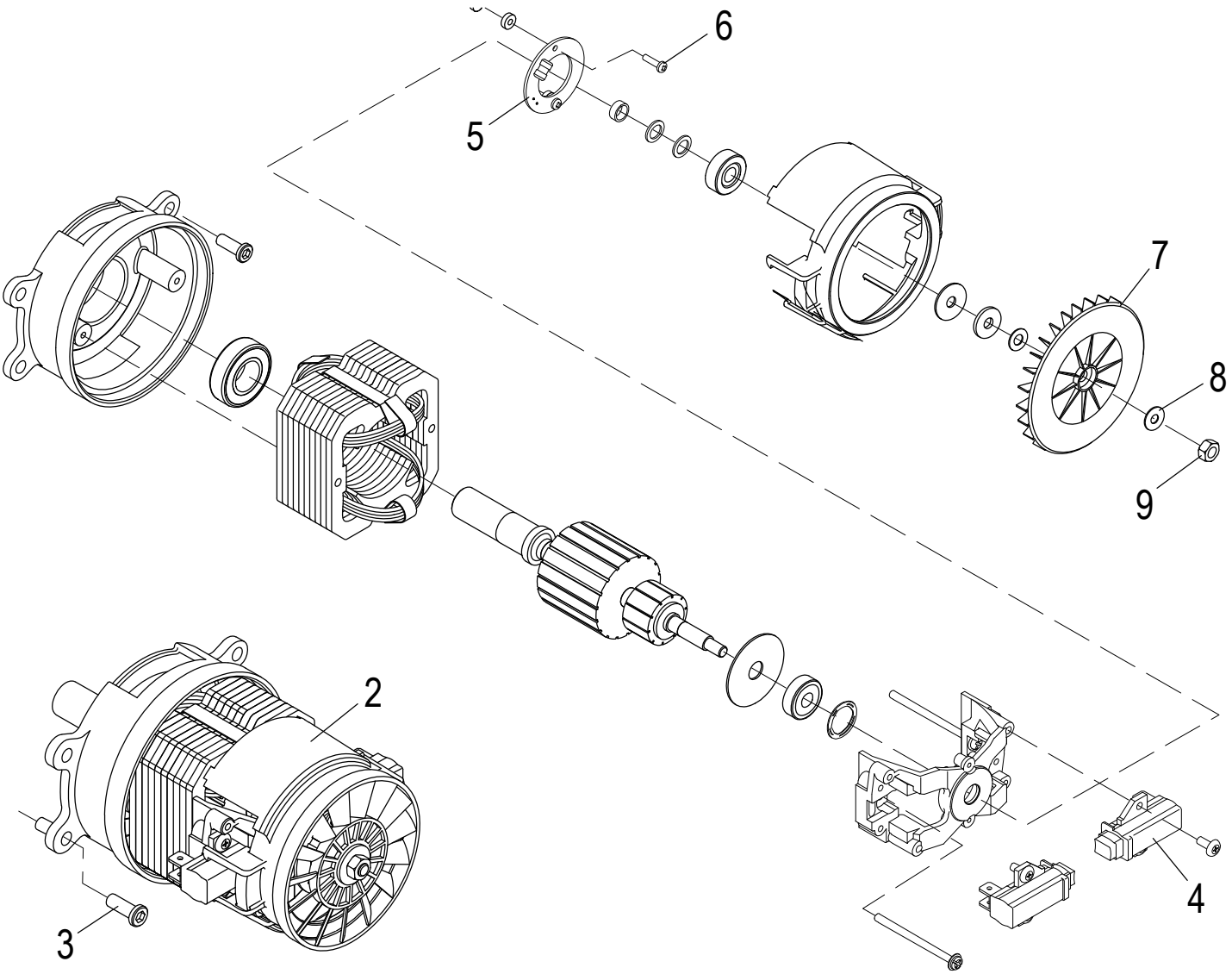

© Globe Food Equipment Company

SP05 Motor Components

Item	Part Number	Description	Qty	Serial Number
1	X00558	Motor Kit (120V50-60HZ/1PH/4A) !elay repl. req. comply w/higher amp	1	
2	X00556	Screw	4	
3	X5D09-1	Carbon Brush (2/Set)	2	
4	X5D15-1	Tachometer	1	
5	H00557	Tach. Mounting M3x14 Pan Hd, Nylon Screw	2	
6	X5D11-1	Fan	1	
7	H00120	Flat Washer M6x18mm	1	
8	H00555	Nut M6-1.0 Hex – LH Thd Reverse	1	
-	9		0	

© Globe Food Equipment Company

SP05 Wiring Diagram

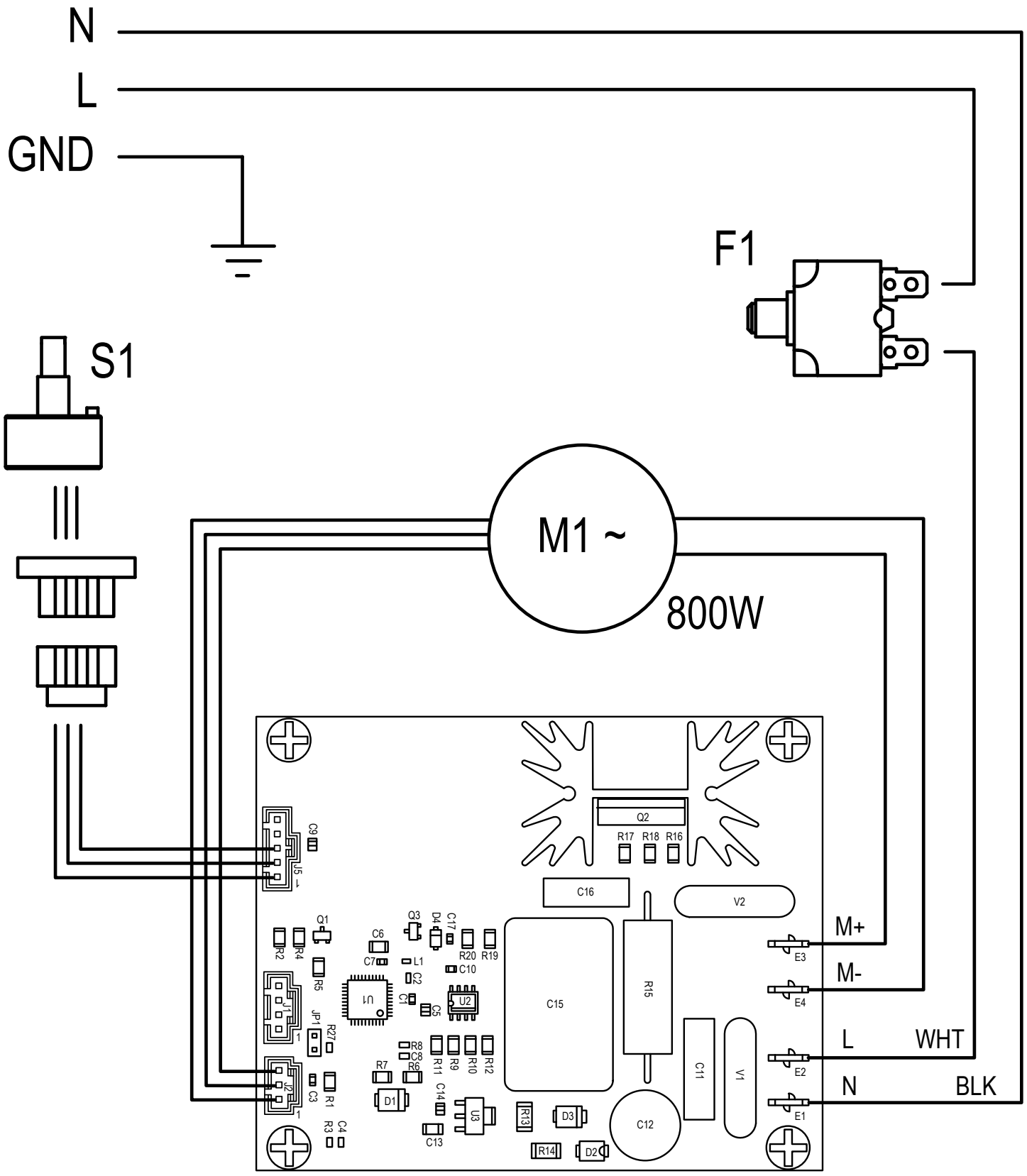

© Globe Food Equipment Company